Sicomat

PIPES AND PUSH-FIT FITTINGS

SICO AIR QUICK

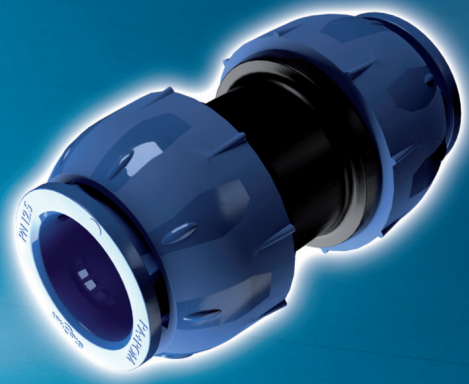

INDEX

PIPES AND TUBINGS FOR COMPRESSED AIR 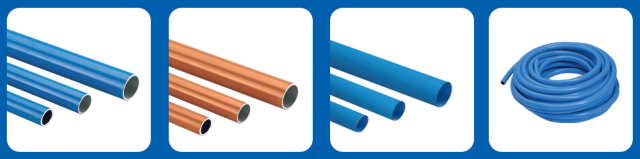 **PAG. 5**

FITTINGS **PAG. 11**

TERMINAL BLOCKS **PAG. 18**

SPACERS 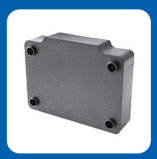 **PAG. 25**

DRAINS **PAG. 26**

FRL UNIT **PAG. 27**

PIPE CLIPS 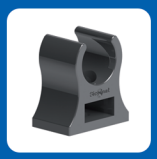 **PAG. 28**

PUSH-FIT RELEASE TOOL **PAG. 29**

SYMBOL

Anti-condensate
Anticondensa
Anticondensación
Anti-condensation
Anti Kondensat

Bag
Sacchetto
Bolsa
Sachet
Beutel

Box
Scatola
Caja
Boîte
Schachtel

PIPES AND PUSH-FIT FITTINGS

TUBI E RACCORDI PUSH-FIT TUBOS Y RACORES PUSH-FIT TUBES ET RACCORDS PUSH-FIT STECKVERBINDER

SicoAIRQUICK

The reproduction of this catalogue is prohibited without authorization. We reserve the right to make changes to our products to enhance their features.

ZERTIFIKAT ◆ CERTIFICATE ◆ 認證證書 ◆ СЕРТИФИКАТ ◆ CERTIFICADO ◆ CERTIFICAT

Product Service

CERTIFICATE

No. B 063668 0009 Rev. 00

Holder of Certificate: **SICOMAT srl**
Via Bologna 10/D
12084 Mondovì CN
ITALY

Certification Mark:

Product: **Distribution systems, pressure-**

The product was tested on a voluntary basis and complies with the essential requirements. The certification mark shown above can be affixed on the product. It is not permitted to alter the certification mark in any way. In addition, the certification holder must not transfer the certificate to third parties. This certificate is valid until the listed date, unless it is cancelled earlier. All applicable requirements of the testing and certification regulations of TÜV SÜD Group have to be complied. For details see: www.tuvsud.com/ps-cert

Test report no.: MES1509718A00TR

Valid until: 2025-11-17

Date, 2020-11-26

(GIANPAOLO MENSA)

Page 1 of 3
TÜV SÜD Product Service GmbH • Certification Body • Ridlerstraße 65 • 80339 Munich • Germany

ASME B31.3
Meets the requirement of ASME B31.3
This code prescribes requirements for material and components, design, fabrication, assembly, examination, inspection and testing of piping.

QUALICOAT Certification
QUALICOAT certification guarantees the quality of the coating applied to the aluminium pipe.

ISO 9001:2015
Manufactured under ISO quality management system.

ASME B31.3 Conforme alle esigenze di ASME B31.3 Questo codice prescrive i requisiti per materiali e componenti, progettazione, fabbricazione, assemblaggio, montaggio, l'esame, l'ispezione e la prova dei tubi. **Certificazione QUALICOAT** Certificazione QUALICOAT è garanzia della qualità della verniciatura applicata al tubo in alluminio. **ISO 9001:2015** Prodotto secondo il sistema di gestione della qualità ISO.	**ASME B31.3** Cumple los requisitos de ASME B31.3 Este código establece los requisitos para los materiales y componentes, diseño, fabricación, montaje, instalación, examen, inspección y prueba de tuberías. **Certificación QUALICOAT** La certificación QUALICOAT es una garantía de la calidad del acabado de laca aplicado al tubo de aluminio. **ISO 9001:2015** Fabricado conforme al sistema de gestión de la calidad ISO.	**ASME B31.3** Satisfait aux exigences ASME B31.3 Ce code prescrit les exigences du matériau et des composants, de conception, fabrication, installation, construction, examen, inspection et d'essai du tuyau. **Certification QUALICOAT** La Certification QUALICOAT est une garantie de qualité de la finition à la laque appliquée sur le tuyau en aluminium. **ISO 9001:2015** Construit conformément au système de management de la qualité ISO	**ASME B31.3** Erfüllt die Anforderungen der Norm ASME B31.3 Diese Norm bestimmt die Anforderungen für Material und Bauteile, Design, Herstellung, Montage, Aufstellung, Prüfung, Inspektion und Tests von Rohrleitungen. **QUALICOAT-Zertifizierung** Die QUALICOAT-Zertifizierung ist eine Garantie für die Qualität der auf Aluminiumrohren angebrachten Lackierung und Beschichtung. **ISO 9001:2015** Herstellung gemäß ISO Qualitätsmanagementsystem.

The reproduction of this catalogue is prohibited without authorization. We reserve the right to make changes to our products to enhance their features.

The experience acquired with **SicoAIR** led to the development of the new line **SicoAirQuick**, the safe and quick push fit solution for the compressed air distribution.
The line, composed by Ø15, Ø22, Ø28 mm aluminium pipes, is assembled with nylon fittings.
Tests show that **SicoAirQuick** line demonstrates excellent resistance to stress generated by water hammer pressure changes and perfect duration in salty fog.
The exterior coating gives **SicoAirQuick** characteristics of low friction to air passage and brief installation time thanks to the coloration of lines in compliance with the fluids identification regulations.

Dall'esperienza maturata nel corso degli anni con il sistema **SicoAIR**, nasce la nuova linea **SicoairQuick**, la soluzione ad innesto, sicura e veloce, per il trasporto dell'aria compressa.
La linea costituita da tubazioni in alluminio Ø15, Ø22, Ø28 mm viene assemblata con raccordi in nylon.
La linea **Sicoairquick** ha dimostrato eccellente resistenza alla fatica generata agli sbalzi di pressione conseguenti ai colpi d'ariete e ottima durata in nebbia salina.
Grazie ai ricoprimenti superficiali **Sicoairquick** garantisce un bassissimo attrito al passaggio dell'aria e bassissimi tempi di posa grazie alla colorazione delle linee secondo le richieste normative per il riconoscimento dei fluidi.

De la experiencia adquirida a lo largo de los años con el sistema **SicoAIR** nace la nueva línea **SicoairQuick**, la solución push fit segura y rápida para la distribución de aire comprimido.
La línea, compuesta por robustos tubos de aluminio de Ø15, Ø22 y Ø28 mm se ensambla con racores de nylon.
La línea **SicoairQuick** ha demostrado una resistencia a la fatiga excelente, generada por los cambios de presión a raíz de los martilleos y una excelente duración en la niebla salina. Con los recubrimientos superficiales, **SicoairQuick** garantiza una fricción al paso del aire y un tiempo de aplicación muy bajos gracias al color de las líneas de conformidad con los requisitos normativos para el reconocimiento de los fluidos.

Issue de l'expérience acquise au fil des années avec le système **SicoAIR**, voici naître la nouvelle ligne **SicoairQuick**, la solution push fit sécurisée et rapide pour la distribution de l'air comprimé.
La ligne, composée de tubes robustes en aluminium de Ø15, Ø22 et Ø28 mm est assemblée à l'aide de raccords en nylon.
la ligne **SicoairQuick** a révélé une excellente capacité de résistance à la fatigue générée par des différences de pression suite à des coups de bélier ainsi qu'une durée optimale en brouillard salin. Grâce aux revêtements superficiels, **SicoairQuick** est en mesure d'offrir un très faible niveau de frottement au passage de l'air et d'être monté très rapidement grâce à la coloration des lignes conforme aux normes en matière de reconnaissance des tubes.

Aus der über die Jahre mit dem **SicoAIR**-System gereiften Erfahrung entstand die neue Produktlinie **SicoairQuick**, die sichere und schnelle push fit Lösung für die Druckluftverteilung.
Die Linie, die aus robusten Aluminiumleitungen mit Ø15, Ø22 und Ø28 mm besteht, wird mit Nylonanschlüssen zusammengebaut.
Die **SicoairQuick** Baureihe hat eine hervorragende Ermüdungsbeständigkeit gegenüber Druckschwankungen infolge von Druckstößen und eine ausgezeichnete Salznebelzeit bewiesen. Durch die Oberflächenbehandlung garantiert **SicoairQuick** eine sehr niedrige Reibung beim Luftdurchzug und sehr kurze Verlegezeiten durch die Einfärbung der Leitungen entsprechend den Vorschriften zum Erkennen von Medien.

SicoairQuick's fittings are optimised for Sicomat's pipes with which they guarantee the peak performance.

I raccordi SicoairQuick sono ottimizzati per il funzionamento su tubi Sicomat con i quali garantiscono le massime prestazioni.

Los accesorios SicoairQuick están optimizados para funcionar en tuberías Sicomat con las que garantizan el máximo rendimiento.

Les raccords SicoairQuick sont optimisés pour les tubes Sicomat avec lesquels ils garantissent les performances maximales.

Die Verbinder SicoairQuick sind optimiert für Sicomats Rohre, mit denen Sie die maximale Leistung garantieren.

The reproduction of this catalogue is prohibited without authorization. We reserve the right to make changes to our products to enhance their features.

ALUMINIUM PIPE
TUBO IN ALLUMINIO
TUBO DE ALUMINIO
TUBE EN ALUMINIUM
ALUMINIUMROHR

CODICE	A	B	Length	(Kg/m)
059.015.012	15	1,5	4	0,18
059.022.019	22	1,5	4	0,24
059.028.025	28	1,5	4	0,31

Blue powder-coated aluminium
Alluminio verniciato blu
Aluminio pintado azul
Aluminium peint en bleu
Blau lackiertes Aluminium
Ral 5015

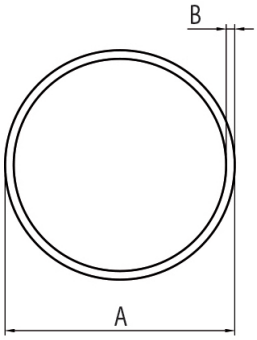

ALUMINIUM PIPE
TUBO IN ALLUMINIO
TUBO DE ALUMINIO
TUBE EN ALUMINIUM
ALUMINIUMROHR

CODICE	A	B	Length	(Kg/m)
059.015.012G	15	1,5	4 m	0,18
059.022.019G	22	1,5	4 m	0,24
059.028.025G	28	1,5	4 m	0,31
059.015.012-6G	15	1,5	6 m	0,18
059.022.019-6G	22	1,5	6 m	0,24
059.028.025-6G	28	1,5	6 m	0,31

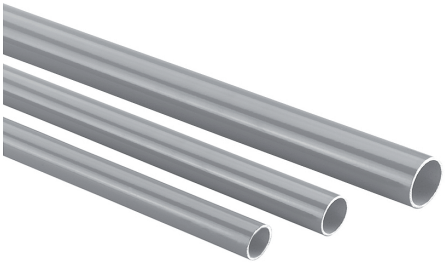

Grey powder-coated aluminium
Alluminio verniciato grigio
Aluminio pintado gris
Aluminium peint en gris
Grau lackiertes Aluminium
Ral 7001

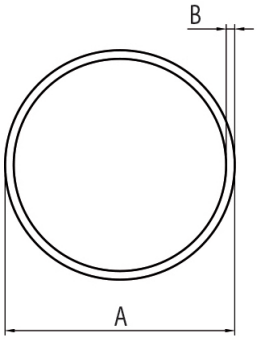

The reproduction of this catalogue is prohibited without authorization. We reserve the right to make changes to our products to enhance their features.

COPPER PIPE
TUBO IN RAME
TUBO DE COBRE
TUBE EN CUIVRE
KUPFERROHR

CODICE	A	B	Length	(Kg/m)
058.015.013	15	1	4 m	0,39
058.022.019	22	1,5	4 m	0,85
058.028.025	28	1,5	4 m	1,10

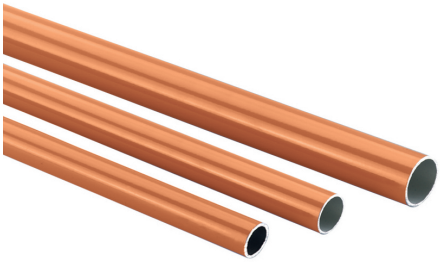

Copper
Rame
Cobre
Cuivre
Kupfer

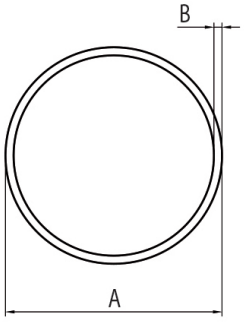

The reproduction of this catalogue is prohibited without authorization. We reserve the right to make changes to our products to enhance their features.

PERT PIPE
TUBO IN PERT
TUBO DE PERT
TUBE EN PERT
PERTROHR

CODICE	A	B	Length	(Kg/m)
060.015.011	15	2	4 m	0,09
060.022.016	22	3	4 m	0,17
060.028.020	28	4	4 m	0,29

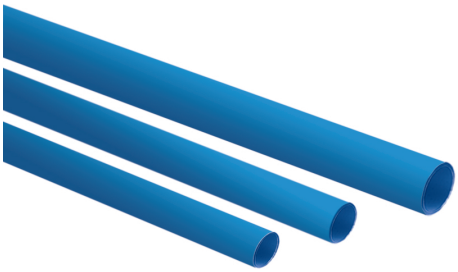

PERT

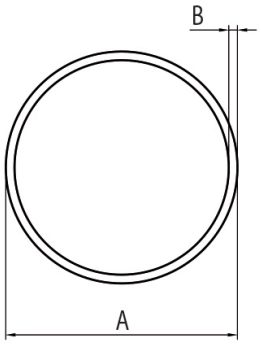

PA 12 SELF-EXTINGUISHING TUBING
TUBO PA12 AUTOESTINGUENTE
TUBO PA12 AUTOESTINGUENTE
TUYAU PA12 AUTOEXTINGUIBLE
SELBSTVERLÖSCHENDER PA12-SCHLAUCH

CODICE	A	B	Length	(Kg/m)
061.015.012	15	1,25	25 m	0,05
061.022.018	22	2	25 m	0,13
061.028.024	28	2	25 m	0,16

PA12

Sicomat The reproduction of this catalogue is prohibited without authorization. We reserve the right to make changes to our products to enhance their features.

DROP BENDS
CURVE DI CALATA
CURVAS DE BAJADA
TUBES PREFORMÉS
SCHWANENHALS-ROHRBOGEN

CODICE	Ø	A	B	C	D	(g)
059.015.100	15	110	435	102,5	332,5	120
059.022.100	22	160	550	155	395	209

Blue powder-coated aluminium
Alluminio verniciato blu
Aluminio pintado azul
Aluminium peint en bleu
Blau lackiertes Aluminium
Ral 5015

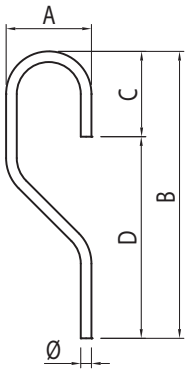

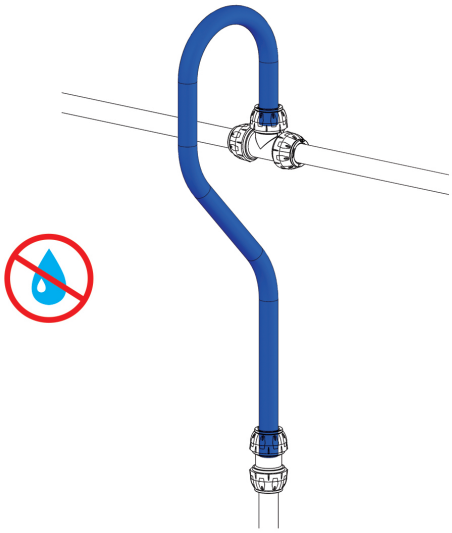

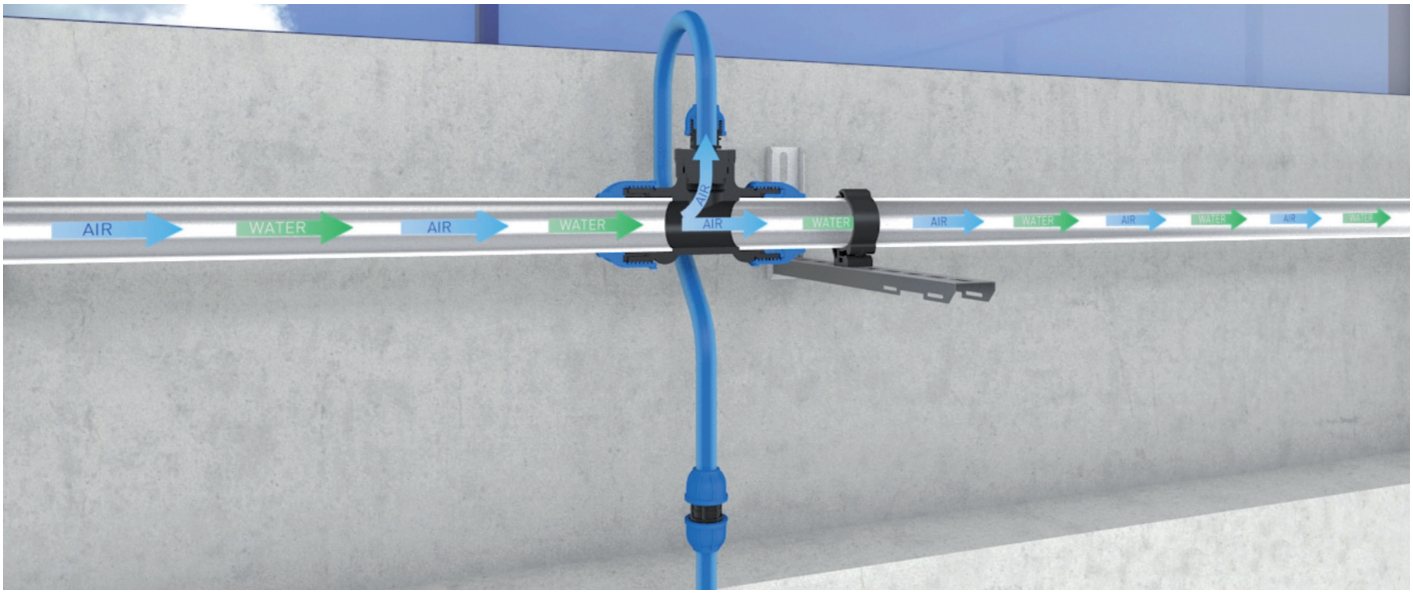

BEND PREFORMED PIPES
CURVE SPECIALI
CURVAS ESPECIALES
COUDES SPÉCIAUX
SPEZIALE-FORMTEILE

CODICE	Ø	A	B	C	D	(g)
059.015.101	15	150				54
059.022.101	22	160				77

Blue powder-coated aluminium
Alluminio verniciato blu
Aluminio pintado azul
Aluminium peint en bleu
Blau lackiertes Aluminium
Ral 5015

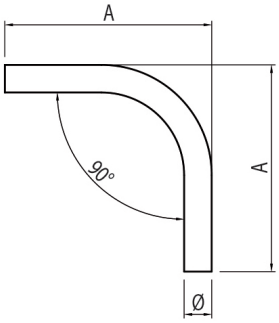

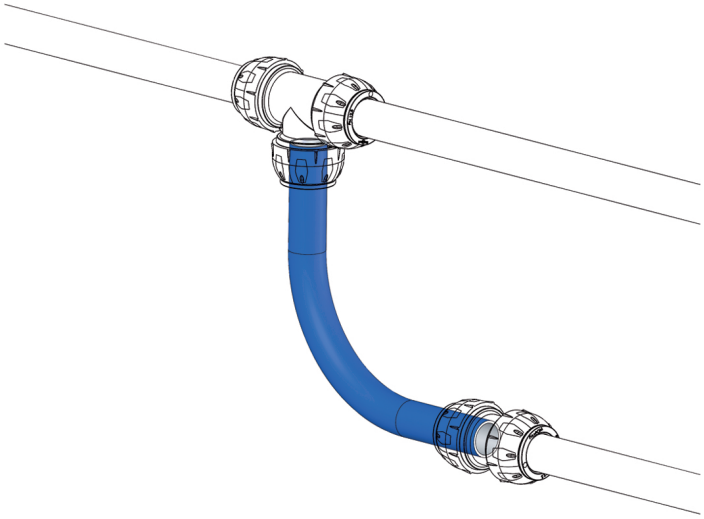

BEND PREFORMED PIPES
CURVE SPECIALI
CURVAS ESPECIALES
COUDES SPÉCIAUX
SPEZIALE-FORMTEILE

CODICE	Ø	A	B	C	D	(g)
059.015.102	15	195	165			101
059.022.102	22	215	200			146

Blue powder-coated aluminium
Alluminio verniciato blu
Aluminio pintado azul
Aluminium peint en bleu
Blau lackiertes Aluminium
Ral 5015

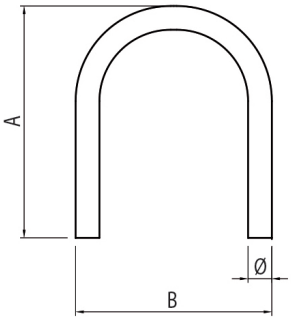

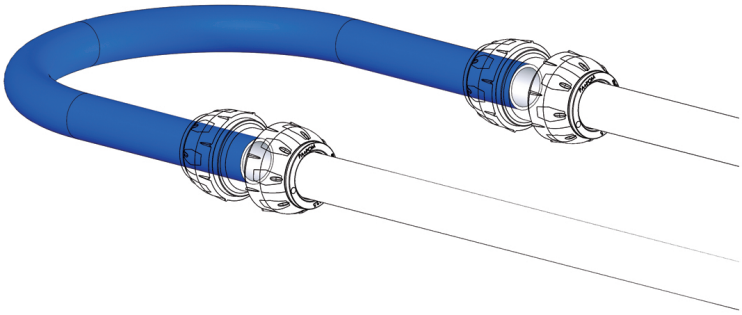

Sicomat The reproduction of this catalogue is prohibited without authorization. We reserve the right to make changes to our products to enhance their features.

BEND PREFORMED PIPES
CURVE SPECIALI
CURVAS ESPECIALES
COUDES SPÉCIAUX
SPEZIALE-FORMTEILE

CODICE	Ø	A	B	C	D	(g)
059.015.103	15	470	166	95		103
059.022.103	22	463	146,5	122		140

Blue powder-coated aluminium
Alluminio verniciato blu
Aluminio pintado azul
Aluminium peint en bleu
Blau lackiertes Aluminium
Ral 5015

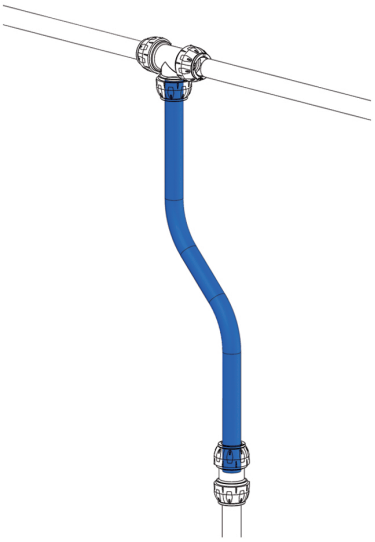

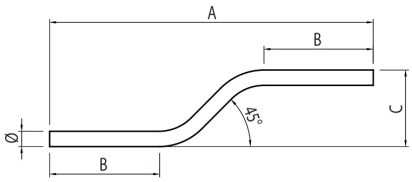

BEND PREFORMED PIPES
CURVE SPECIALI
CURVAS ESPECIALES
COUDES SPÉCIAUX
SPEZIALE-FORMTEILE

CODICE	Ø	A	B	C	D	(g)
059.015.104	15	345	95	110	195	97
059.022.104	22	460	150	150	240	146

Blue powder-coated aluminium
Alluminio verniciato blu
Aluminio pintado azul
Aluminium peint en bleu
Blau lackiertes Aluminium
Ral 5015

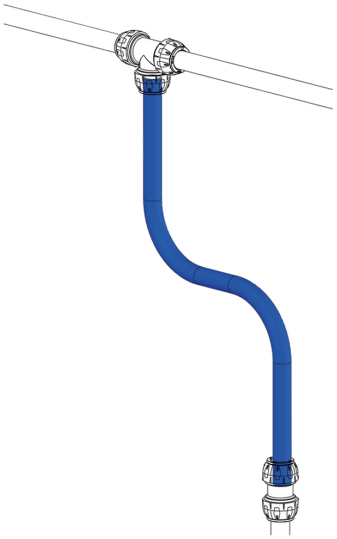

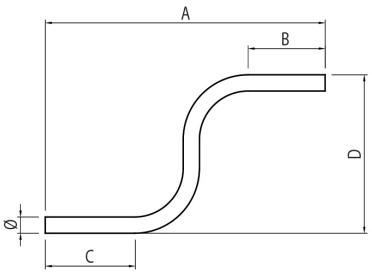

The reproduction of this catalogue is prohibited without authorization. We reserve the right to make changes to our products to enhance their features.

STRAIGHT FITTING
MANICOTTO GIUNZIONE DRITTO
MANGUITO DE UNIÓN RECTO
MANCHON JONCTION DROIT
GERADER VERBINDER

CODICE	Ø	A	B	C	D	(g)
R210.015.015	15	30,5	64			50
R210.022.022	22	42	73			78
R210.028.028	28	47,5	96			132

PA6 + POM

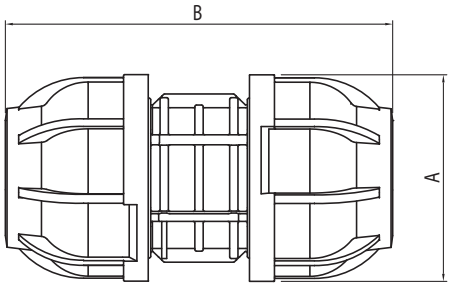

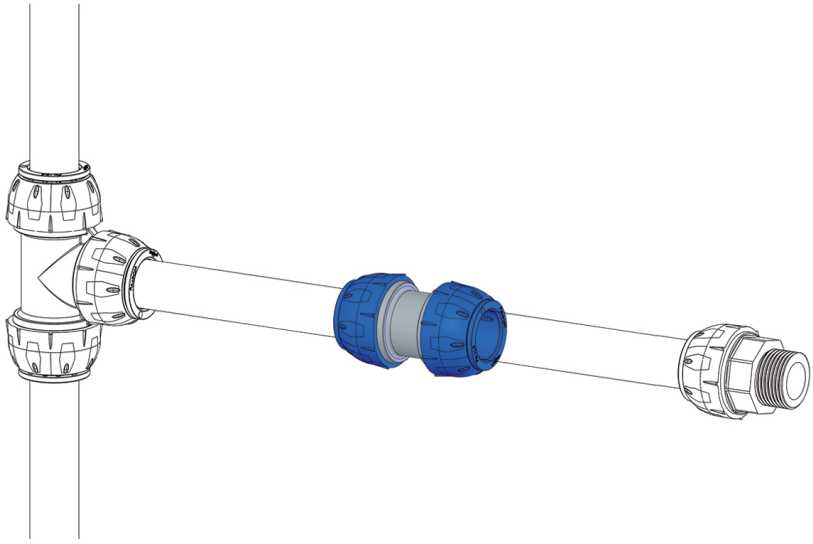

90° ELBOW FITTING
RACCORDO GIUNZIONE 90°
CODO 90°
COUDE ÉGAL 90°
WINKEL 90°

CODICE	Ø	A	B	C	D	(g)
R213.015.015	15	30,5	55			54
R213.022.022	22	42	68			82
R213.028.028	28	47,5	85			136

PA6 + POM

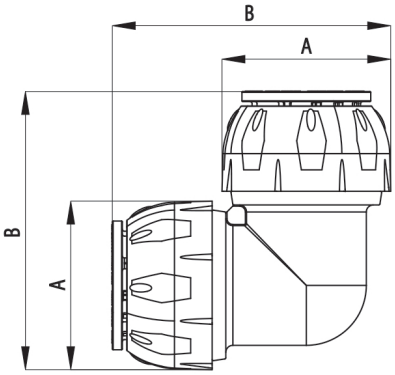

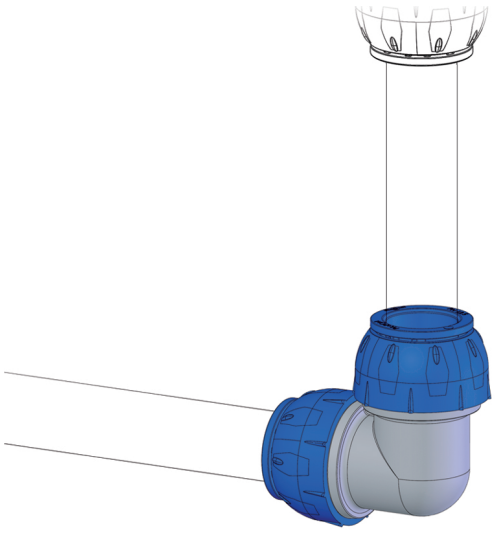

Sicomat The reproduction of this catalogue is prohibited without authorization. We reserve the right to make changes to our products to enhance their features.

"TEE " FITTING
RACCORDO "T" PARI
EMPALME EN "T"
RACCORD EN "T"
T-STÜCK

CODICE	Ø	A	B	C	D	(g)
R214.015.000	15	30,5	78	55		80
R214.022.000	22	42	96	69		135
R214.028.000	28	47,5	121	85		210

PA6 + POM

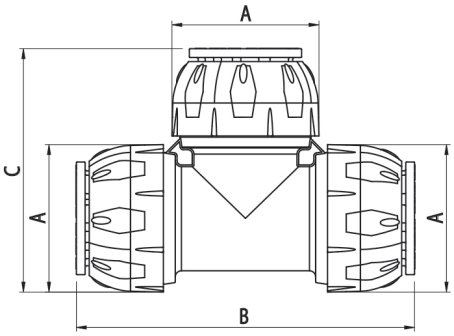

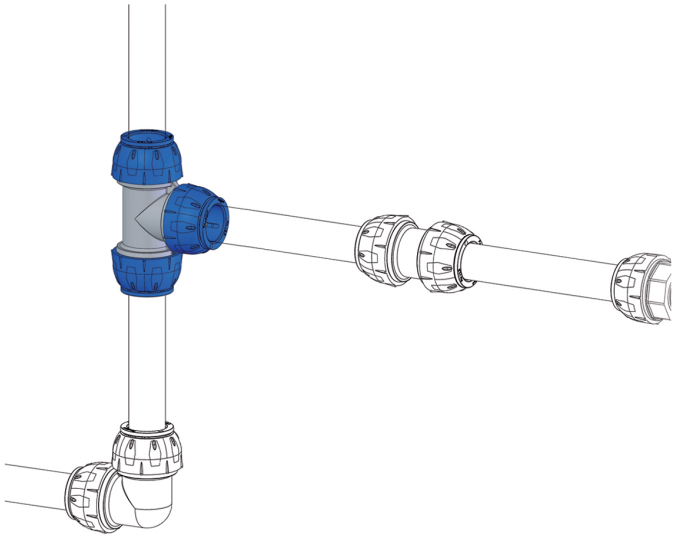

DRY AIR DROP TEE FITTING
RACCORDO "T" RIDOTTO PER CALATA
RACOR "T" REDUCIDO PARA BAJADA
RACCORD EN "T" REDUIT POUR DESCENTE
T-REDUZIERSTÜCK MIT KONDENSAT-STOPP

CODICE	Ø	A	B	C	D	(g)
R247.028.015	15	47,5	121	30,5	117	290
R247.028.022	22	47,5	121	42	138	305

PA6 + POM

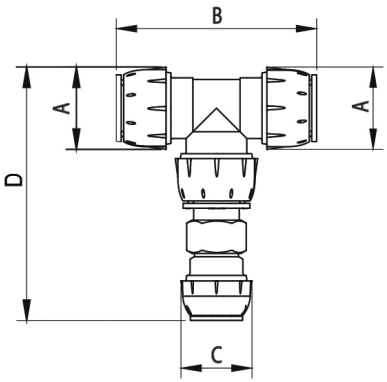

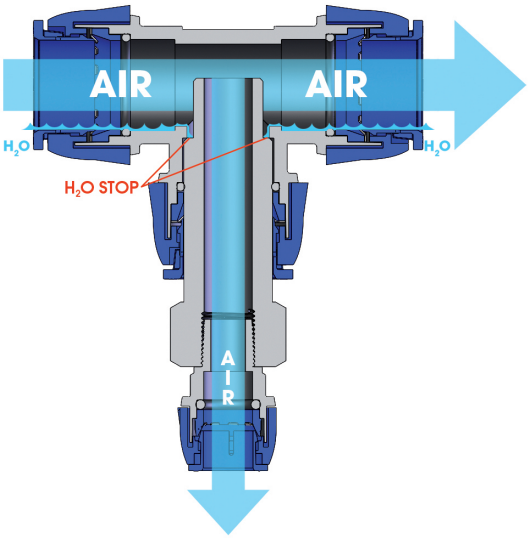

The reproduction of this catalogue is prohibited without authorization. We reserve the right to make changes to our products to enhance their features.

STRAIGHT MALE FITTING
RACCORDO DRITTO MASCHIO
RACOR RECTO MACHO
RACCORD DROIT MÂLE
GERADER VERBINDER MIT AUSSENGEWINDE

CODICE	Ø	A	B	C	D	(g)
R211.015.038	15-3/8″	30,5	46			18
R211.015.012	15-1/2″	30,5	49			19
R211.022.012	22-1/2″	42	56			34
R211.028.012	28-1/2″	47,5	66			53
R211.028.034	28-3/4″	47,5	67			54

PA6 + POM

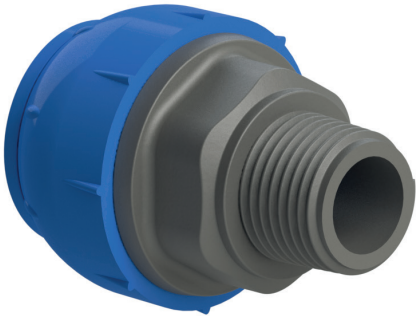

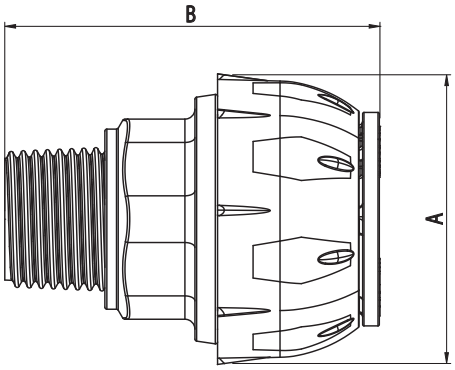

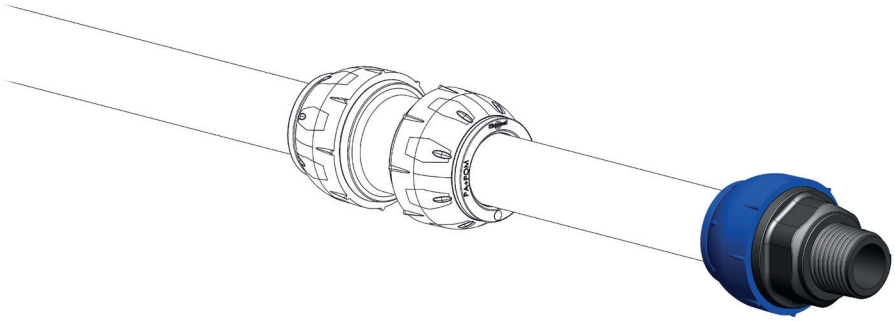

END CAP
TAPPO
TAPÓN
BOUCHON
ENDSTOPFEN

CODICE	Ø	A	B	C	D	(g)
R221.015.000	15	30,5	37			16
R221.022.000	22	42	43			31
R221.028.000	28	47,5	53			48

PA6 + POM

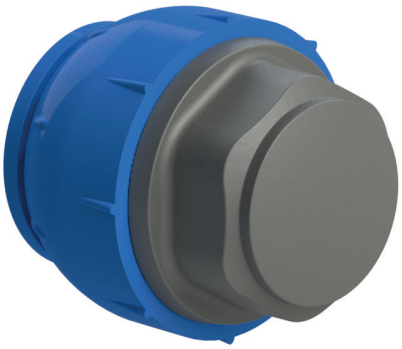

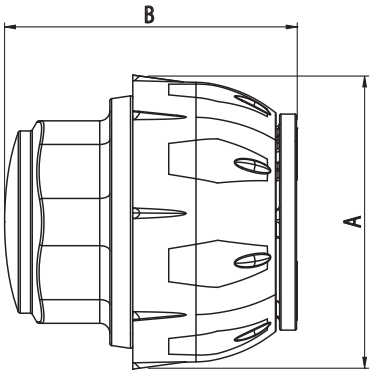

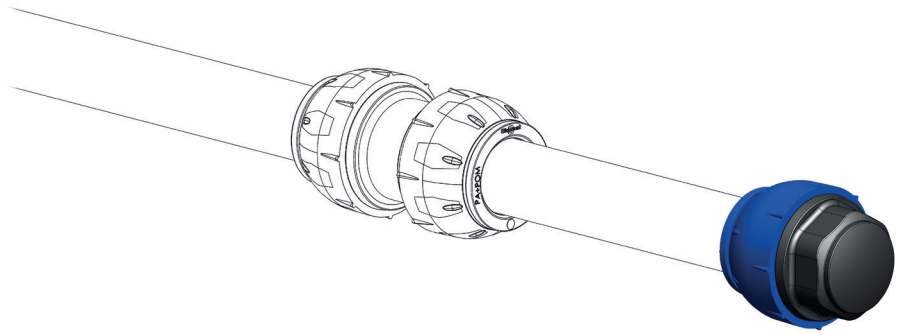

The reproduction of this catalogue is prohibited without authorization. We reserve the right to make changes to our products to enhance their features.

STRAIGHT UNION FITTING WITH BALL VALVE
RACCORDO DRITTO CON VALVOLA A SFERA
RACOR RECTO CON VÁLVULA DE BOLA
RACC. DROIT AVEC VANNE À BOISEAU SPHÉRIQUE
GERADER VERBINDER MIT KUGELHAHN

CODICE	Ø	A	B	C	D	(g)
R224.015.012	15-1/2″	58	122	32,5		182
R224.022.012	22-1/2″	64	138	43,5		204,5
R224.028.034	28-3/4″	67	169	50,5		307,5

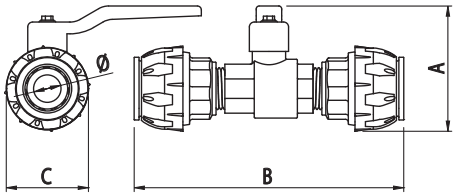

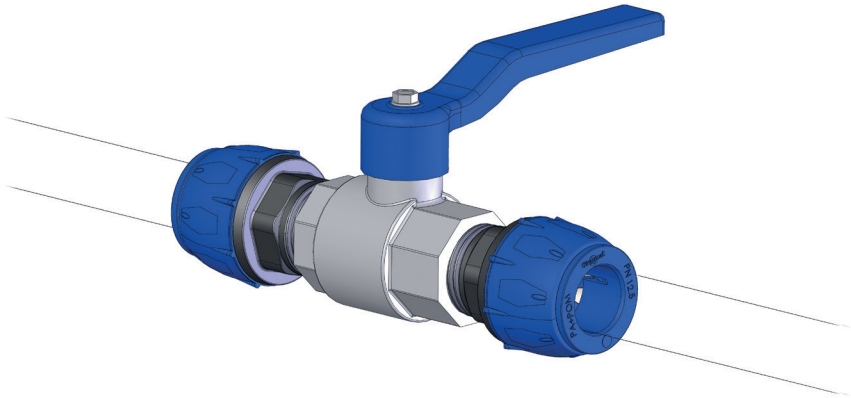

STRAIGHT UNION FITTING WITH BALL VALVE
RACCORDO DRITTO CON VALVOLA A SFERA
RACOR RECTO CON VÁLVULA DE BOLA
RACC. DROIT AVEC VANNE À BOISEAU SPHÉRIQUE
GERADER VERBINDER MIT KUGELHAHN

CODICE	Ø	A	B	C	D	(g)
R225.015.012	15-1/2″	58	160	32,5		286
R225.022.012	22-1/2″	64	174,5	43,5		309
R225.028.034	28-3/4″	67	211	150,5		468

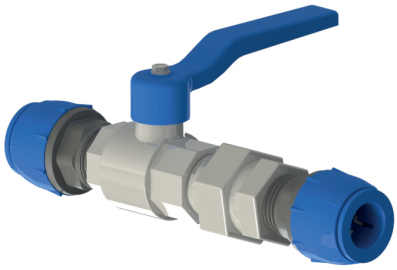

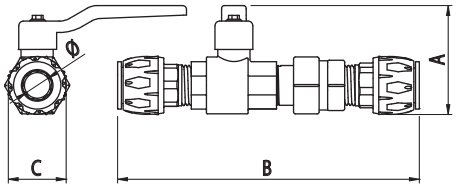

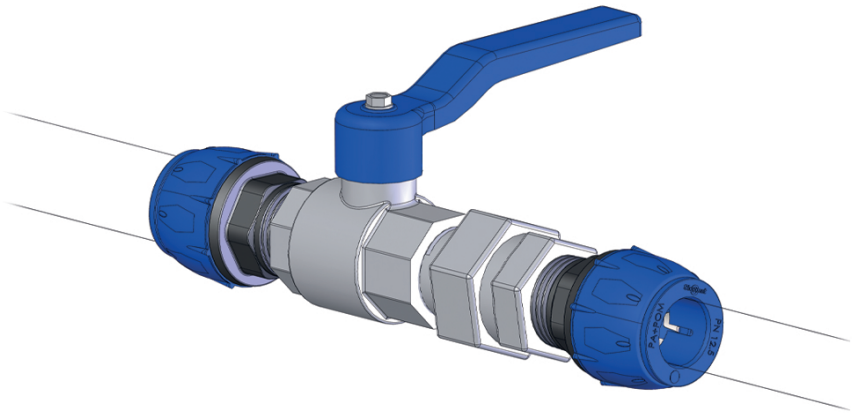

The reproduction of this catalogue is prohibited without authorization. We reserve the right to make changes to our products to enhance their features.

STRAIGHT UNION FITTING WITH BALL VALVE
RACCORDO DRITTO CON VALVOLA A SFERA
RACOR RECTO CON VÁLVULA DE BOLA
RACC. DROIT AVEC VANNE À BOISEAU SPHÉRIQUE
GERADER VERBINDER MIT KUGELHAHN

CODICE	Ø	A	B	C	D	(g)
R220.015.012	15-1/2″	117	32,5			165
R220.022.012	22-1/2″	133	43,5			188
R220.028.034	28-3/4″	162	50,5			300,5

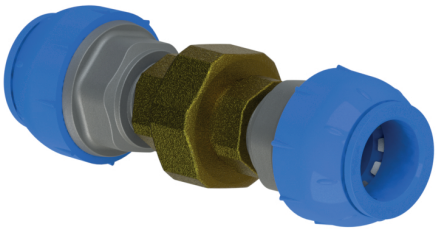

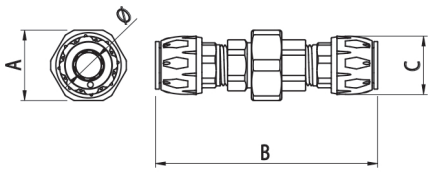

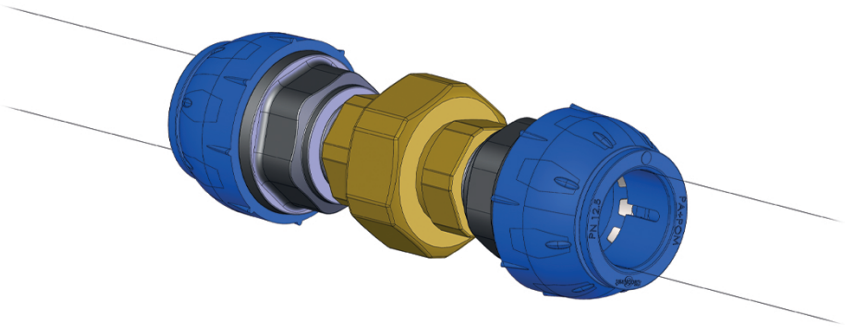

The reproduction of this catalogue is prohibited without authorization. We reserve the right to make changes to our products to enhance their features.

ALUMINIUM MALE FITTING
GIUNZIONE IN ALLUMINIO MASCHIO
MANGUITO DE ALUMINIO MACHO
MANCHON EN ALUMINIUM MÂLE
ALUMINIUM-VERBINDER MIT AUSSENGEWINDE

CODICE	Ø	A	B	C	D	(g)
R238.015.038	15-3/8″	15	62			23
R238.022.012	22-1/2″	22	69,5			38
R238.028.034	28-3/4″	28	81			59

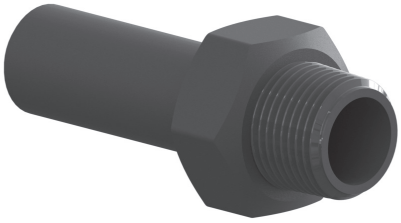

Black anodised aluminium
Alluminio anodizzato nero
Aluminio anodizado en negro
Aluminium anodisé noir
Schwarz anodisiertes Aluminium

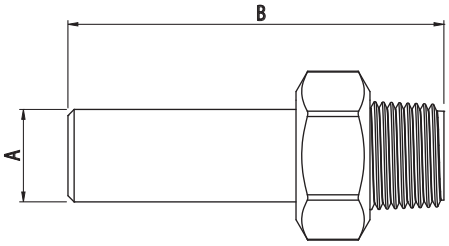

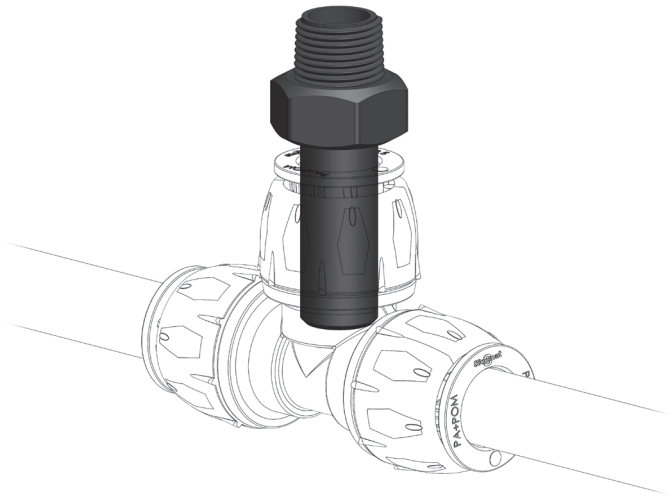

ALUMINIUM FEMALE FITTING
GIUNZIONE IN ALLUMINIO FEMMINA
MANGUITO DE ALUMINIO HEMBRA
MANCHON EN ALUMINIUM FEMELLE
ALUMINIUM-VERBINDER MIT INNENGEWINDE

CODICE	Ø	A	B	C	D	(g)
R237.015.038	15-3/8″	15	53			21
R237.022.012	22-1/2″	22	61			40
R237.028.034	28-3/4″	28	72,5			60

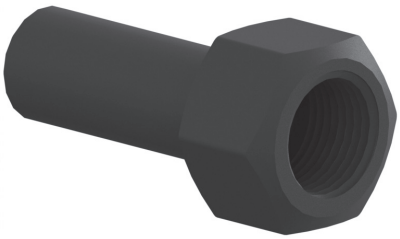

Black anodised aluminium
Alluminio anodizzato nero
Aluminio anodizado en negro
Aluminium anodisé noir
Schwarz anodisiertes Aluminium

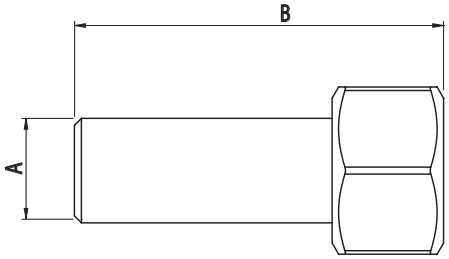

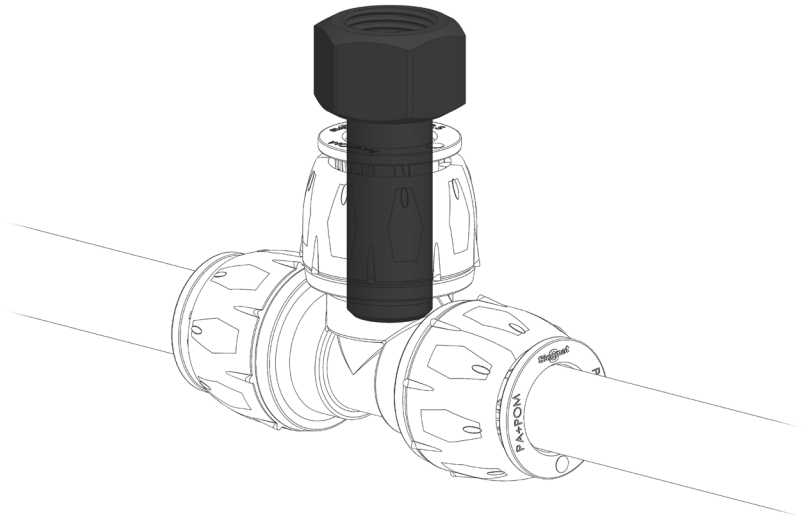

The reproduction of this catalogue is prohibited without authorization. We reserve the right to make changes to our products to enhance their features.

FLEXIBLES L. 500 mm
TUBI FLESSIBILI L. 500 mm
TUBOS FLEXIBLES L. 500 mm
TUBES FLEXIBLES 500 mm DE LONG
VERBINDERSCHLÄUCHE L. 500 mm

CODICE	Ø1	Ø2	Length	PN	(g)
R226.012.500	1/2″	1/2″	500	20	201
R226.034.500	3/4″	3/4″	500	20	373
R226.001.500	1″	1″	500	15	676
R226.114.500	1-1/4″	1-1/4″	500	10	1200
R226.112.500	1-1/2″	1-1/2″	500	10	1400
R226.002.500	2″	2″	500	10	2000

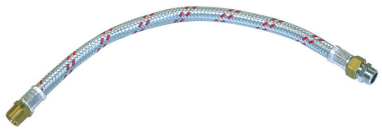

Pipes non-suitable for compressor outlet connection
Tubi non idonei per il collegamento in uscita dal compressore
Tubos no apropriados para la conexión de salida del compresor
Tubes non adaptés pour le raccordement à la sortie du compresseur
Nicht geeignet für den Anschluss am Ausgang des Kompressors

FLEXIBLES L. 1.500 mm
TUBI FLESSIBILI L. 1.500 mm
TUBOS FLEXIBLES L. 1.500 mm
TUBES FLEXIBLES 1.500 mm DE LONG
VERBINDERSCHLÄUCHE L. 1.500 mm

CODICE	Ø1	Ø2	Length	PN	(g)
R227.012.150	1/2″	1/2″	1.500	20	450
R227.034.150	3/4″	3/4″	1.500	20	810
R227.001.150	1″	1″	1.500	15	1340
R227.114.150	1-1/4″	1-1/4″	1.500	10	2600
R227.112.150	1-1/2″	1-1/2″	1.500	10	3010
R227.002.150	2″	2″	1.500	10	5040

Pipes non-suitable for compressor outlet connection
Tubi non idonei per il collegamento in uscita dal compressore
Tubos no apropriados para la conexión de salida del compresor
Tubes non adaptés pour le raccordement à la sortie du compresseur
Nicht geeignet für den Anschluss am Ausgang des Kompressors

The reproduction of this catalogue is prohibited without authorization. We reserve the right to make changes to our products to enhance their features.

TERMINAL BLOCK
BLOCCHETTO TERMINALE
BLOQUE TERMINAL
APPLIQUE MURALE
WANDDOSE

CODICE	I	O	A	B	C	D	Ø	E	F		(g)
R243.012.038	1xG 1/2″	1xG 3/8″	62	52	41	37	4,5	27	46	160	55
R243.012.012	2xG 1/2″	1xG 3/8″	62	52	41	37	4,5	27	46	160	55

Polyamide / Poliammide / Poliamide / Polyamide / Polyamid

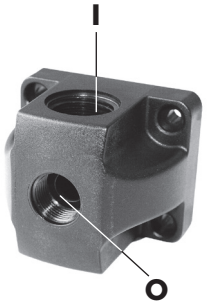

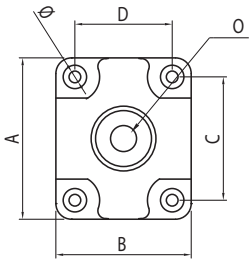

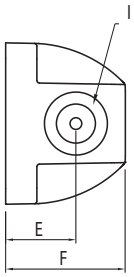

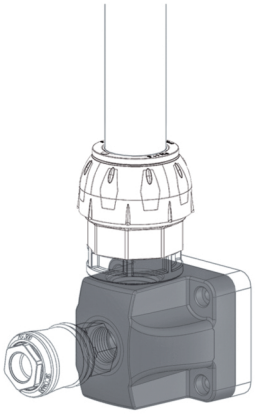

SPACER
DISTANZIALE
DISTANCIADOR
ENTRETOISE
DISTANZPLATTE

CODICE	A	B	Ø	E	F		(g)
R243.000.009	62	52	4,5	9	11	10	17

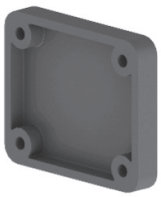

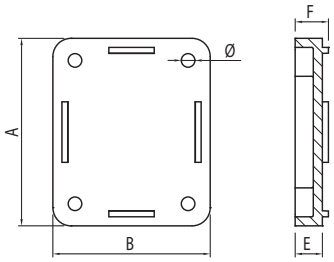

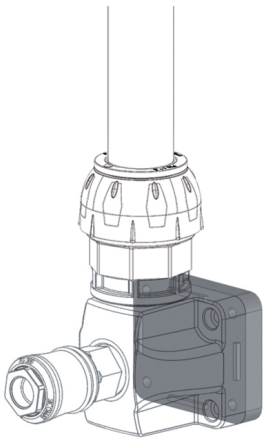

USE OF SPACERS WITH TERMINAL BLOCKS R243
SCHEMA DI UTILIZZO DISTANZIALI CON BLOCCHETTI TERMINALI R243
ESQUEMA DE USO DE LOS DISTANCIADORES CON BLOQUES TERMINALES R243
NOTICE D'UTILISATION DES ENTRETOISES AVEC APPLIQUES MURALES R243
BEDIENUNGSANLEITUNG FÜR DISTANZPLATTEN BEI WANDDOSEN R243

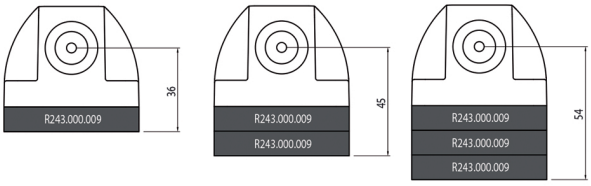

The reproduction of this catalogue is prohibited without authorization. We reserve the right to make changes to our products to enhance their features.

TERMINAL BLOCK 1 OUTLET
BLOCCHETTO TERMINALE 1 USCITA
BLOQUE TERMINAL 1 SALIDA
APPLIQUE MURALE 1 SORTIE
WANDDOSE 1 AUSGANG

CODICE	I	O	A	B	C	D	Ø	E	F		(g)
R241.012.001	G 1/2"	1xG 1/2"	86	60	70	44	5,5	22	55	80	108
R241.034.001	G 3/4"	1xG 1/2"	86	60	70	44	5,5	22	55	80	108

Polyamide and aluminium / Poliammide e alluminio / Poliamide y aluminio / Polyamide et aluminium
Polyamid und Aluminium

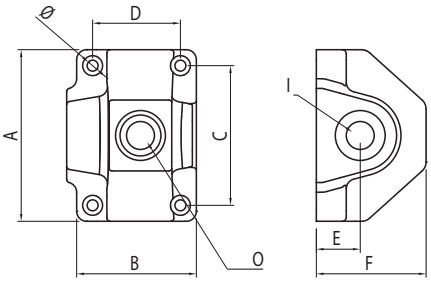

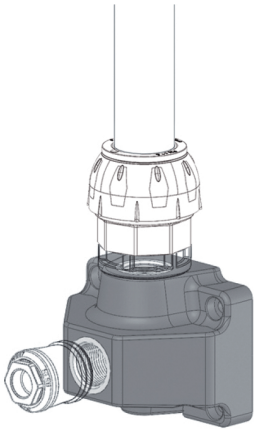

TERMINAL BLOCK 1 OUTLET
BLOCCHETTO TERMINALE 1 USCITA
BLOQUE TERMINAL 1 SALIDA
APPLIQUE MURALE 1 SORTIE
WANDDOSE 1 AUSGANG

CODICE	I	O	A	B	C	D	Ø	E	F		(g)
R241.012.001SC	G 1/2"	1xG 1/2"	86	60	70	44	5,5	22	55	80	108
R241.034.001SC	G 3/4"	1xG 1/2"	86	60	70	44	5,5	22	55	80	108

Polyamide and aluminium / Poliammide e alluminio / Poliamide y aluminio / Polyamide et aluminium
Polyamid und Aluminium

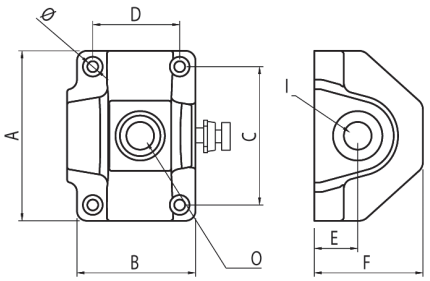

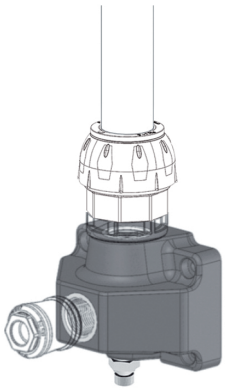

Sicomat The reproduction of this catalogue is prohibited without authorization. We reserve the right to make changes to our products to enhance their features.

TERMINAL BLOCK 1 OUTLET
BLOCCHETTO TERMINALE 1 USCITA
BLOQUE TERMINAL 1 SALIDA
APPLIQUE MURALE 1 SORTIE
WANDDOSE 1 AUSGANG

CODICE	I	O	A	B	C	D	Ø	E	F		(g)
RP241.012.001	G 1/2"	1xG 1/2"	86	60	70	44	5,5	22	55	80	88
RP241.034.001	G 3/4"	1xG 1/2"	86	60	70	44	5,5	22	55	80	88

Polyamide / Poliammide / Poliamide / Polyamide / Polyamid

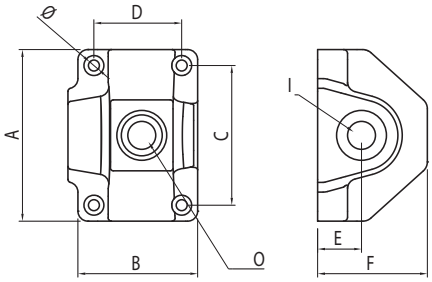

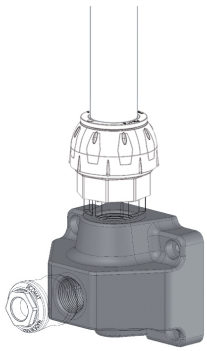

TERMINAL BLOCK 1 OUTLET
BLOCCHETTO TERMINALE 1 USCITA
BLOQUE TERMINAL 1 SALIDA
APPLIQUE MURALE 1 SORTIE
WANDDOSE 1 AUSGANG

CODICE	I	O	A	B	C	D	Ø	E	F		(g)
RP241.012.001SC	G 1/2"	1xG 1/2"	86	60	70	44	5,5	22	55	80	88
RP241.034.001SC	G 3/4"	1xG 1/2"	86	60	70	44	5,5	22	55	80	88

Polyamide / Poliammide / Poliamide / Polyamide / Polyamid

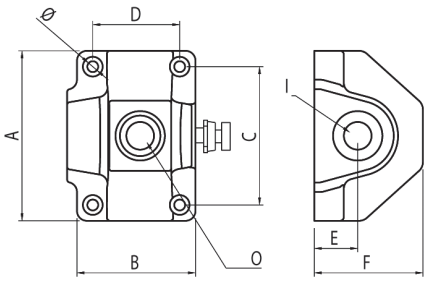

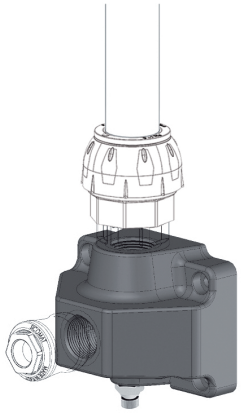

The reproduction of this catalogue is prohibited without authorization. We reserve the right to make changes to our products to enhance their features.

TERMINAL BLOCK 2 OUTLETS
BLOCCHETTO TERMINALE 2 USCITE
BLOQUE TERMINAL 2 SALIDAS
APPLIQUE MURALE 2 SORTIES
WANDDOSE 2 AUSGÄNGE

CODICE	I	O	A	B	C	D	Ø	E	F		(g)
R241.012.002	G 1/2"	2xG 1/2"	86	60	70	44	5,5	22	55	80	134
R241.034.002	G 3/4"	2xG 1/2"	86	60	70	44	5,5	22	55	80	134

Polyamide and aluminium / Poliammide e alluminio / Poliamide y aluminio / Polyamide et aluminium
Polyamid und Aluminium

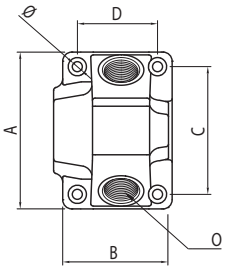

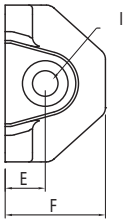

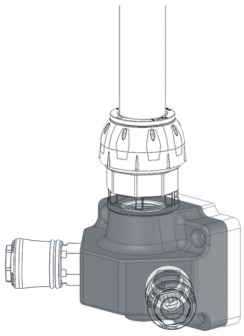

TERMINAL BLOCK 2 OUTLETS
BLOCCHETTO TERMINALE 2 USCITE
BLOQUE TERMINAL 2 SALIDAS
APPLIQUE MURALE 2 SORTIES
WANDDOSE 2 AUSGÄNGE

CODICE	I	O	A	B	C	D	Ø	E	F		(g)
R241.012.002SC	G 1/2"	2xG 1/2"	86	60	70	44	5,5	22	55	80	134
R241.034.002SC	G 3/4"	2xG 1/2"	86	60	70	44	5,5	22	55	80	134

Polyamide and aluminium / Poliammide e alluminio / Poliamide y aluminio / Polyamide et aluminium
Polyamid und Aluminium

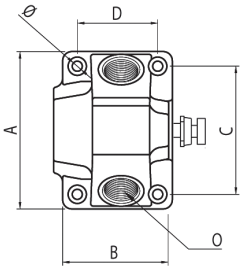

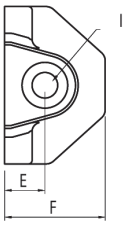

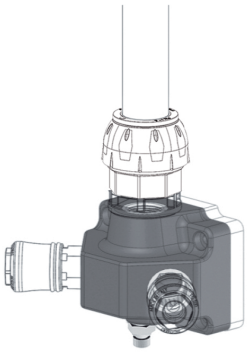

The reproduction of this catalogue is prohibited without authorization. We reserve the right to make changes to our products to enhance their features.

TERMINAL BLOCK 2 OUTLETS
BLOCCHETTO TERMINALE 2 USCITE
BLOQUE TERMINAL 2 SALIDAS
APPLIQUE MURALE 2 SORTIES
WANDDOSE 2 AUSGÄNGE

CODICE	I	O	A	B	C	D	Ø	E	F		(g)
RP241.012.002	G 1/2"	2xG 1/2"	86	60	70	44	5,5	22	55	80	88
RP241.034.002	G 3/4"	2xG 1/2"	86	60	70	44	5,5	22	55	80	88

Polyamide / Poliammide / Poliamide / Polyamide / Polyamid

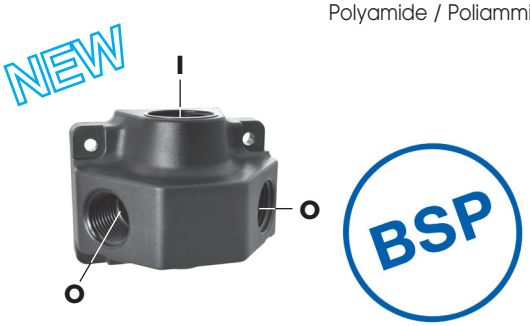

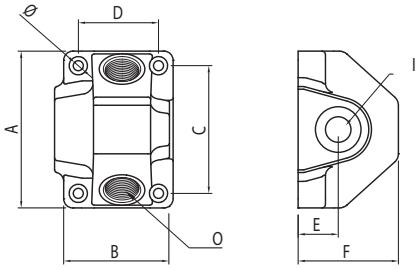

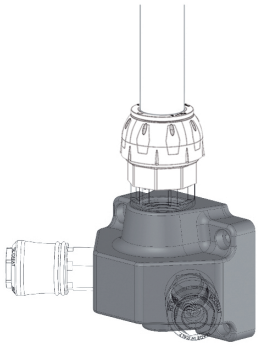

TERMINAL BLOCK 2 OUTLETS
BLOCCHETTO TERMINALE 2 USCITE
BLOQUE TERMINAL 2 SALIDAS
APPLIQUE MURALE 2 SORTIES
WANDDOSE 2 AUSGÄNGE

CODICE	I	O	A	B	C	D	Ø	E	F		(g)
RP241.012.002SC	G 1/2"	2xG 1/2"	86	60	70	44	5,5	22	55	80	88
RP241.034.002SC	G 3/4"	2xG 1/2"	86	60	70	44	5,5	22	55	80	88

Polyamide / Poliammide / Poliamide / Polyamide / Polyamid

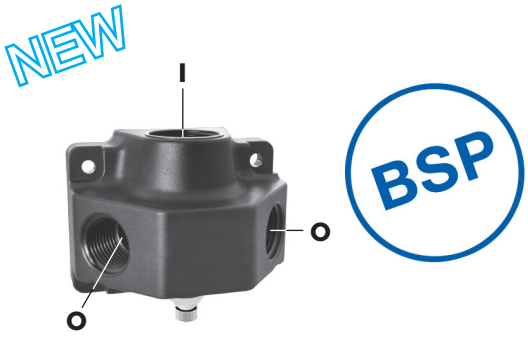

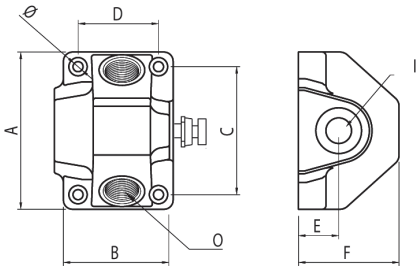

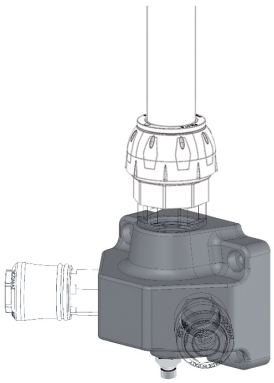

The reproduction of this catalogue is prohibited without authorization. We reserve the right to make changes to our products to enhance their features.

TERMINAL BLOCK 3 OUTLETS
BLOCCHETTO TERMINALE 3 USCITE
BLOQUE TERMINAL 3 SALIDAS
APPLIQUE MURALE 3 SORTIES
WANDDOSE 3 AUSGÄNGE

CODICE	I	O	A	B	C	D	Ø	E	F		(g)
R241.012.003	G 1/2"	3xG 1/2"	86	60	70	44	5,5	22	55	80	151
R241.034.003	G 3/4"	3xG 1/2"	86	60	70	44	5,5	22	55	80	151

Polyamide and aluminium / Poliammide e alluminio / Poliamide y aluminio / Polyamide et aluminium
Polyamid und Aluminium

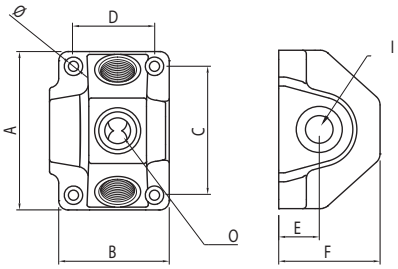

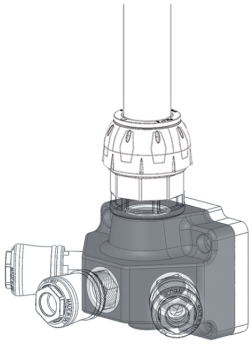

TERMINAL BLOCK 3 OUTLETS
BLOCCHETTO TERMINALE 3 USCITE
BLOQUE TERMINAL 3 SALIDAS
APPLIQUE MURALE 3 SORTIES
WANDDOSE 3 AUSGÄNGE

CODICE	I	O	A	B	C	D	Ø	E	F		(g)
R241.012.003SC	G 1/2"	3xG 1/2"	86	60	70	44	5,5	22	55	80	151
R241.034.003SC	G 3/4"	3xG 1/2"	86	60	70	44	5,5	22	55	80	151

Polyamide and aluminium / Poliammide e alluminio / Poliamide y aluminio / Polyamide et aluminium
Polyamid und Aluminium

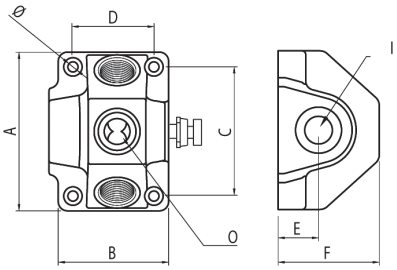

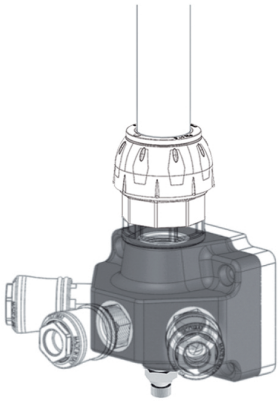

The reproduction of this catalogue is prohibited without authorization. We reserve the right to make changes to our products to enhance their features.

TERMINAL BLOCK 3 OUTLETS
BLOCCHETTO TERMINALE 3 USCITE
BLOQUE TERMINAL 3 SALIDAS
APPLIQUE MURALE 3 SORTIES
WANDDOSE 3 AUSGÄNGE

CODICE	I	O	A	B	C	D	Ø	E	F		(g)
RP241.012.003	G 1/2"	3xG 1/2"	86	60	70	44	5,5	22	55	80	88
RP241.034.003	G 3/4"	3xG 1/2"	86	60	70	44	5,5	22	55	80	88

Polyamide / Poliammide / Poliamide / Polyamide / Polyamid

NEW

BSP

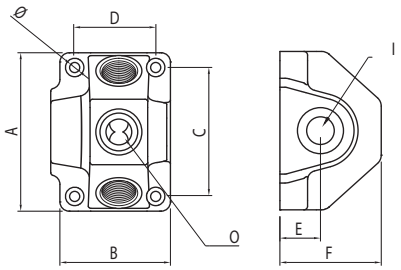

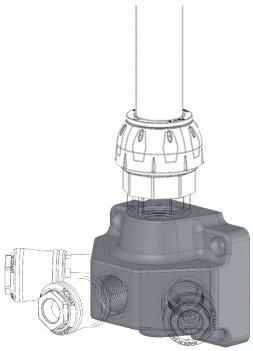

TERMINAL BLOCK 3 OUTLETS
BLOCCHETTO TERMINALE 3 USCITE
BLOQUE TERMINAL 3 SALIDAS
APPLIQUE MURALE 3 SORTIES
WANDDOSE 3 AUSGÄNGE

CODICE	I	O	A	B	C	D	Ø	E	F		(g)
RP241.012.003SC	G 1/2"	3xG 1/2"	86	60	70	44	5,5	22	55	80	88
RP241.034.003SC	G 3/4"	3xG 1/2"	86	60	70	44	5,5	22	55	80	88

Polyamide / Poliammide / Poliamide / Polyamide / Polyamid

NEW

BSP

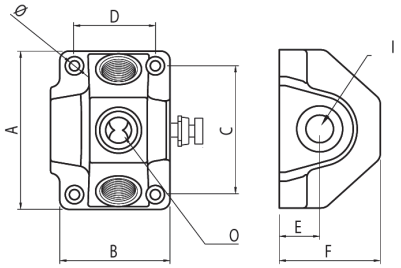

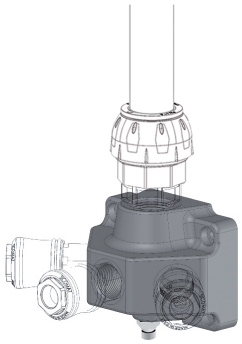

The reproduction of this catalogue is prohibited without authorization. We reserve the right to make changes to our products to enhance their features.

SPACER
DISTANZIALE
DISTANCIADOR
ENTRETOISE
DISTANZPLATTE

CODICE	A	B	C	D	Ø	E	F		(g)
R242.000.010	85	65	10	70	5,5	44	60	10	23
R242.000.013	85	65	13	70	5,5	44	60	10	25
R242.000.020	85	65	20	70	5,5	44	60	10	117

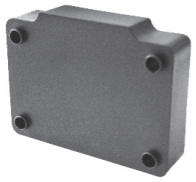

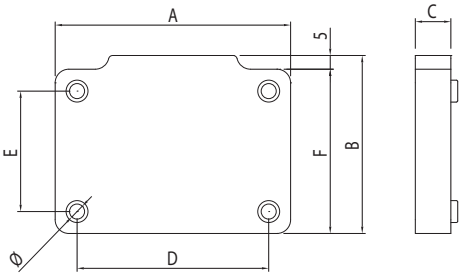

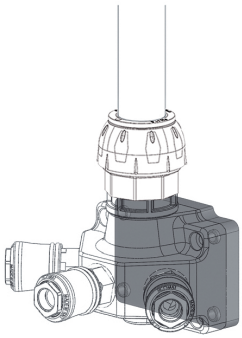

USE OF SPACERS WITH TERMINAL BLOCKS R241

SCHEMA DI UTILIZZO DISTANZIALI CON BLOCCHETTI TERMINALI R241
ESQUEMA DE USO DE LOS DISTANCIADORES CON BLOQUES TERMINALES R241
NOTICE D'UTILISATION DES ENTRETOISES AVEC APPLIQUES MURALES R241
BEDIENUNGSANLEITUNG FÜR DISTANZPLATTEN BEI WANDDOSEN R241

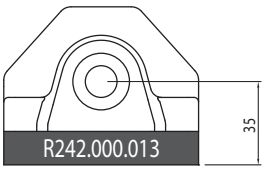

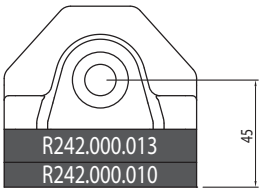

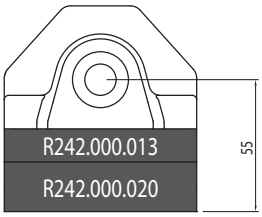

Sicomat The reproduction of this catalogue is prohibited without authorization. We reserve the right to make changes to our products to enhance their features.

DRAIN
RUBINETTO
GRIFO
RACCORD
KUPPLUNG

CODICE	A	B	CH			(g)
089.800.350	1/4″	23	14	-	-	15

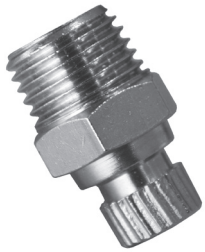

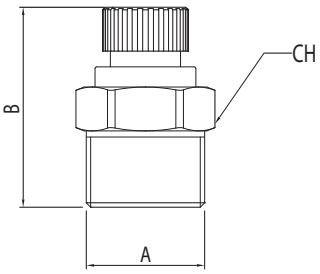

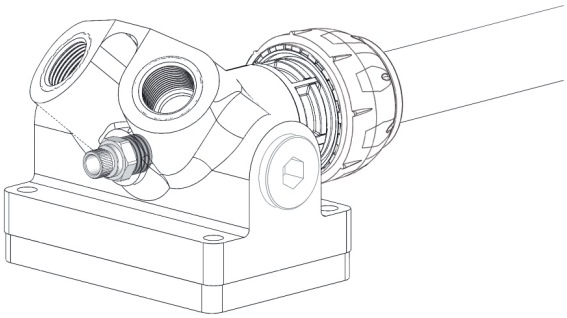

AUTOMATIC CONDENSATE DRAIN
SCARICO AUTOMATICO DI CONDENSA
DESCARGA AUTOMÁTICA DE LA CONDENSACIÓN
DÉCHARGEMENT AUTOMATIQUE DE LA CONDENSATION
AUTOMATISCHER KONDENSATABLASS

CODICE	Ø	Electrical pilot	(g)
R223.014.000	1/4″	220 V CA	268

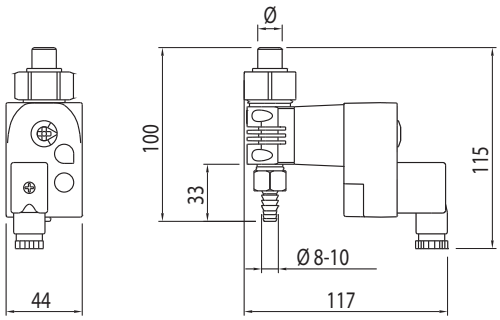

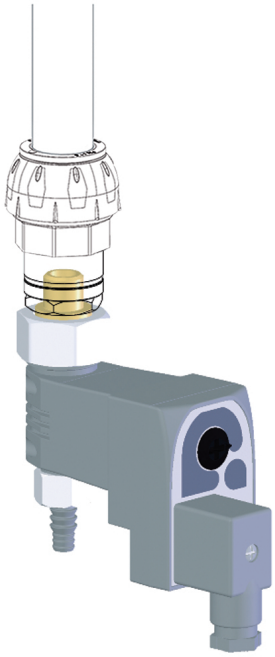

The reproduction of this catalogue is prohibited without authorization. We reserve the right to make changes to our products to enhance their features.

FRL UNIT
GRUPPO TRATTAMENTO ARIA
GRUPO DE TRATAMIENTO DEL AIRE
FILTRE RÉGULATEUR LUBRIFICATEUR
WARTUNGSEINHEIT

CODICE	Ø	A	B	C	D	(g)
R224.012.000	1/2″	253	127	62	58	1613
R224.038.000	3/8″	185	95	50	52,5	826

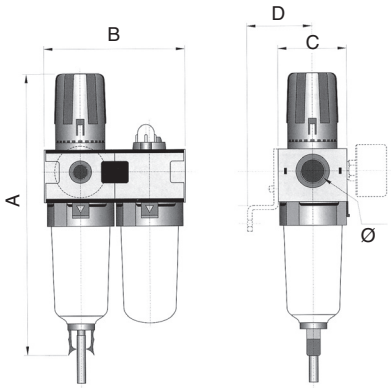

The reproduction of this catalogue is prohibited without authorization. We reserve the right to make changes to our products to enhance their features.

PIPE CLIP
COLLARE
COLLARÍN
COLLIER
HALTERING

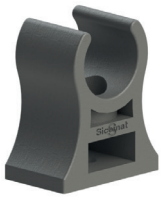
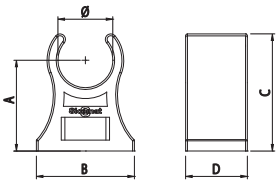

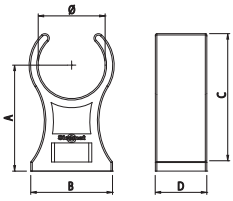

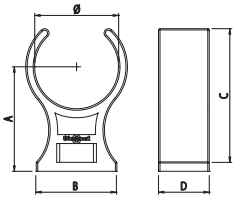

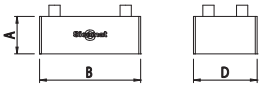

CODICE	Ø	A	B	C	D		(g)
R244.015.000	15	25	27	30	17	25	6
R244.022.000	22	35	27	42	17	25	7
R244.028.000	28	35	27	45	17	25	8
R244.000.038	-	10	27	-	17	25	3

COMBINATION OF DIFFERENT DIAMETERS

ABBINAMENTI DI DIVERSI DIAMETRI
COMBINACÍON DE VARIOS DIÁMETROS
COMBINAISONS DE DIAMÈTRES DIFFÉRENTS
KOMBINATIONEN VERSCHIEDENER DURCHMESSER

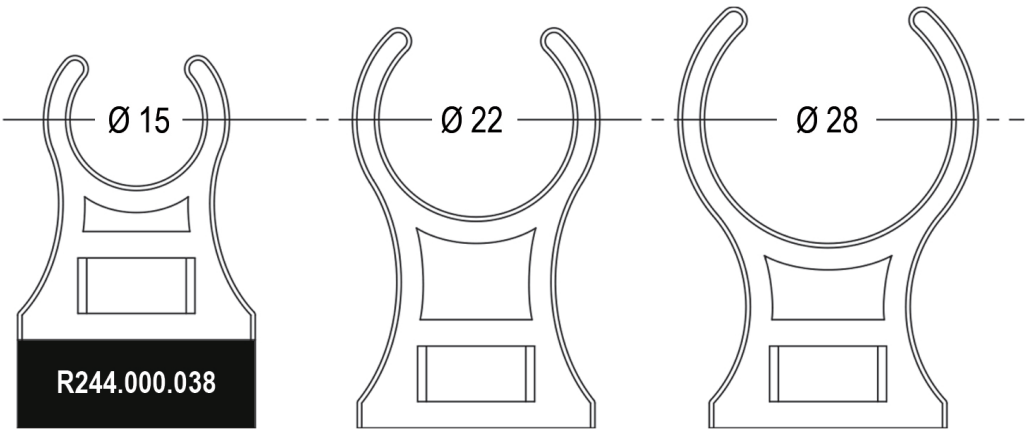

The reproduction of this catalogue is prohibited without authorization. We reserve the right to make changes to our products to enhance their features.

PUSH-FIT RELEASE TOOL
STRUMENTO DI SGANCIO RACCORDO
HERRAMIENTA PARA LA LIBERACIÓN DEL MANGUITO PUSH-FIT
DEMONTAGEWERKZEUG FÜR STECKVERBINDER

CODICE	Ø	A	B	(g)
R235.015.000	15	40	31	6
R235.022.000	22	52	34	10
R235.028.000	28	59	39	13

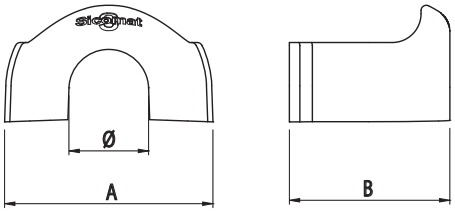

SAFETY SYSTEM

THE SPECIAL RELEASE TOOL PREVENTS THE ACCIDENTAL OPENING
LO SPECIALE STRUMENTO PREVIENE LO SGANCIO ACCIDENTALE
LA HERRAMIENTA ESPECIAL IMPIDE LA APERTURA ACCIDENTAL
L'OUTIL SPECIEL PRÉVIENT L'OUVERTURE ACCIDENTELLE
DER SONDERWERKZEUG VERHINDERT DIE ZUFÄLLIGE ÖFFNUNG

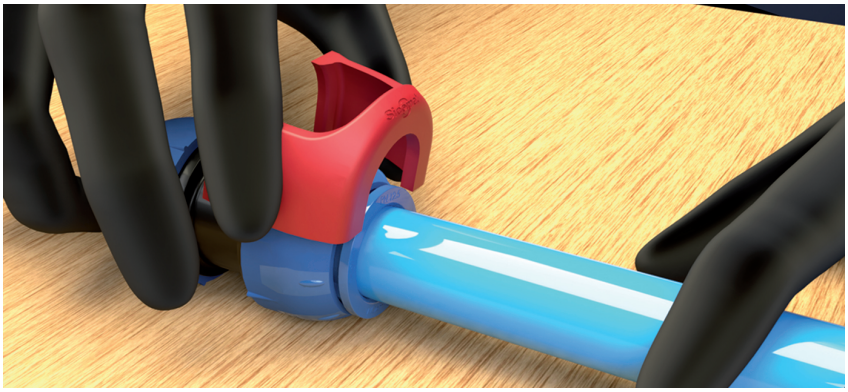

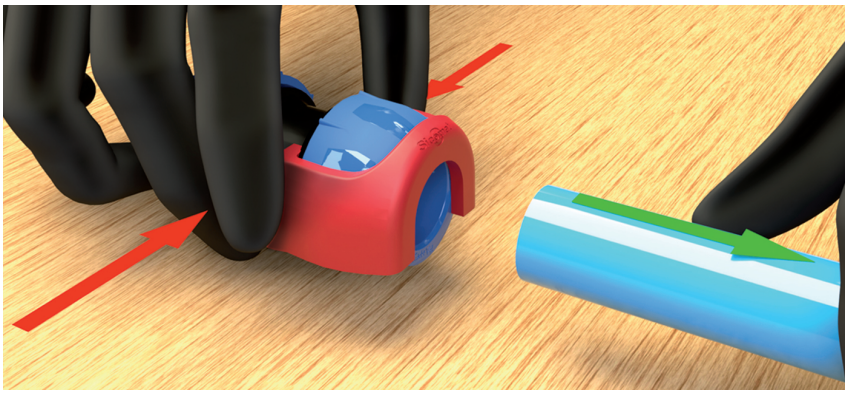

The reproduction of this catalogue is prohibited without authorization. We reserve the right to make changes to our products to enhance their features.

The reproduction of this catalogue is prohibited without authorization. We reserve the right to make changes to our products to enhance their features.

Ed. 07 - © Copyright 07/2021

PIPES AND PUSH-FIT FITTINGS

Sicomat

Distributed by:

Via Bologna, 10/D - Mondovì (Cn) - Italy
Tel. +39 0174 47.780 - Fax +39 0174 47.975
skype: sic.com
www.sicomat.com contact@sicomat.com